IDMT Relay Characteristics

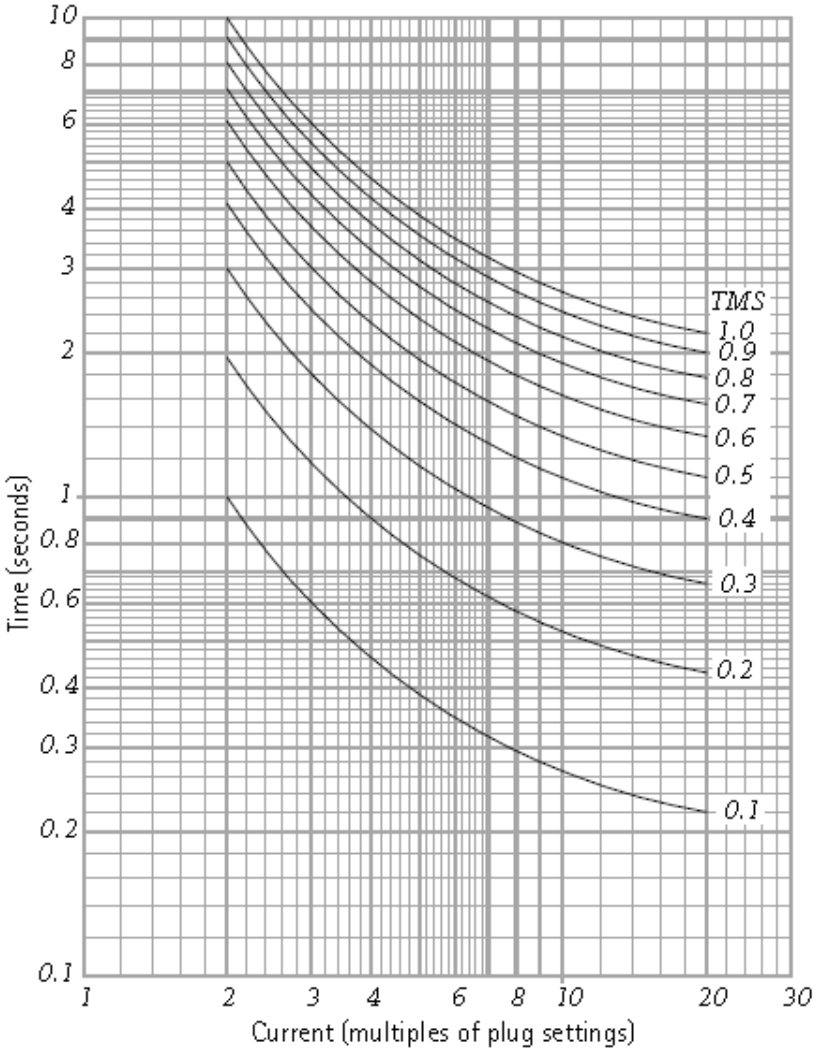

Overcurrent Protection Using Definite Time Relay

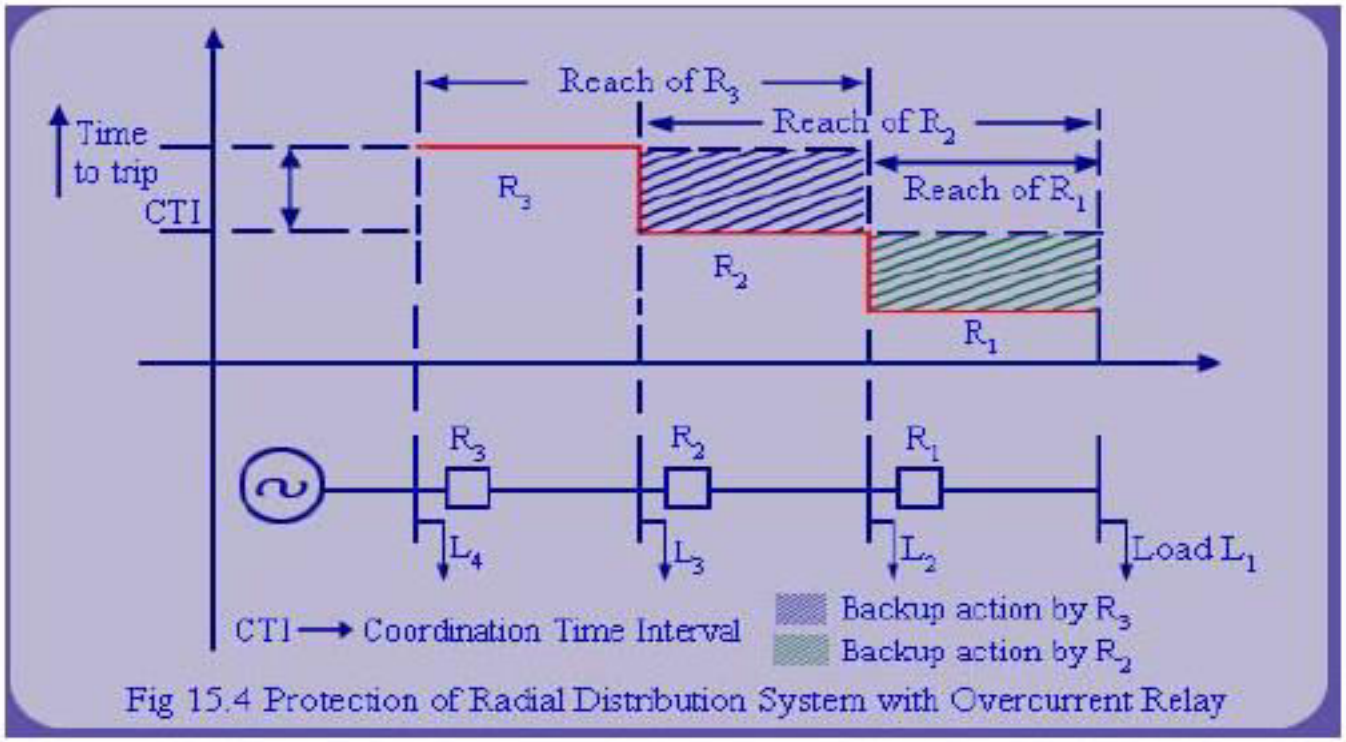

Fig 15.4 Protection of Radial Distribution System with Overcurrent Relay

- R_1 trips without any intentional time delay.
- R_2 has to coordinate with R_1 and its operation is delayed by CTI.
- R_3 has to back up R_2 and it is again time delayed.

Faults are classified into two:

- Phase fault which do not involve ground.
- Earth fault which involve ground.

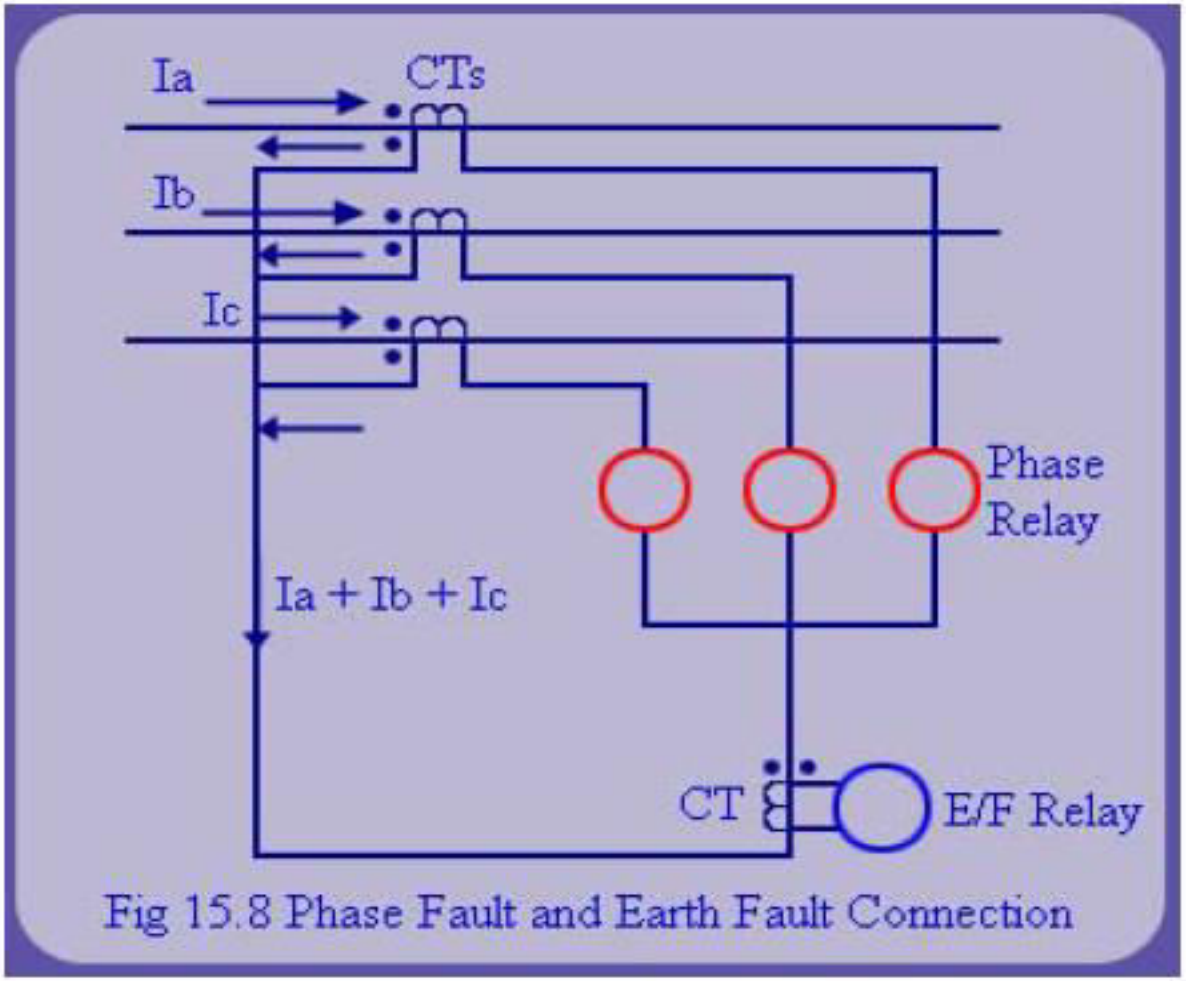

Fig 15.8 Phase Fault and Earth Fault Connection

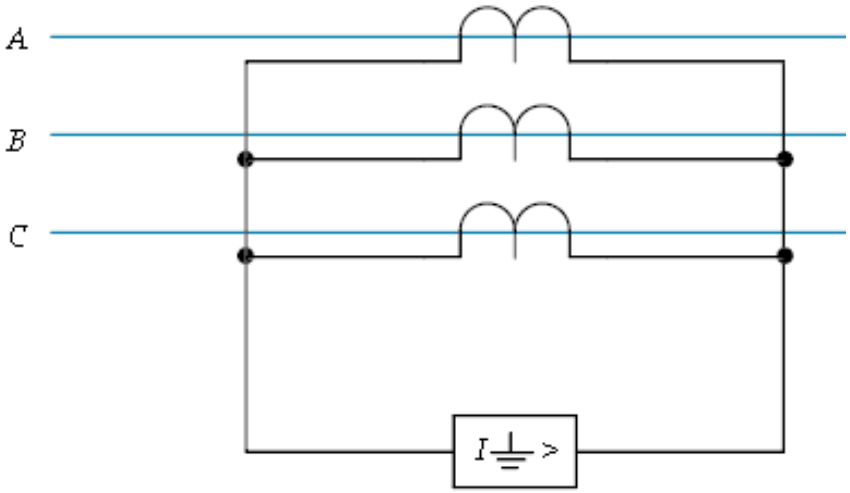
A
B
C
I ⏚ >

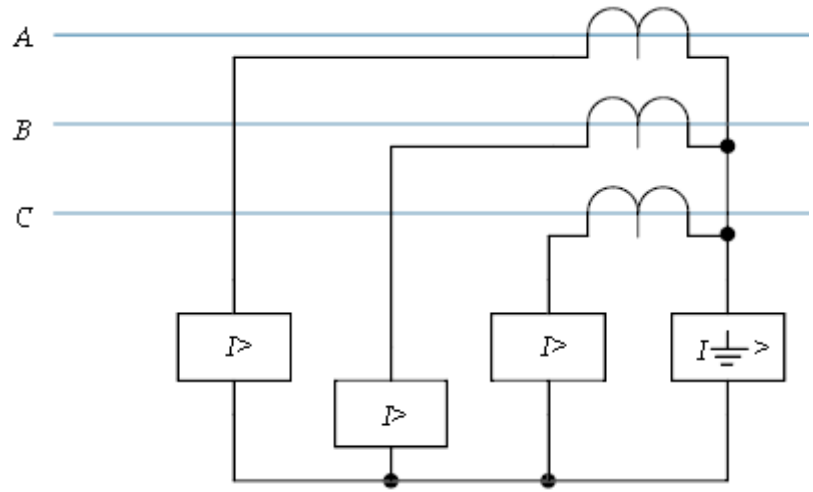
A
B
C
I>
I>
I>
I ⏚ >

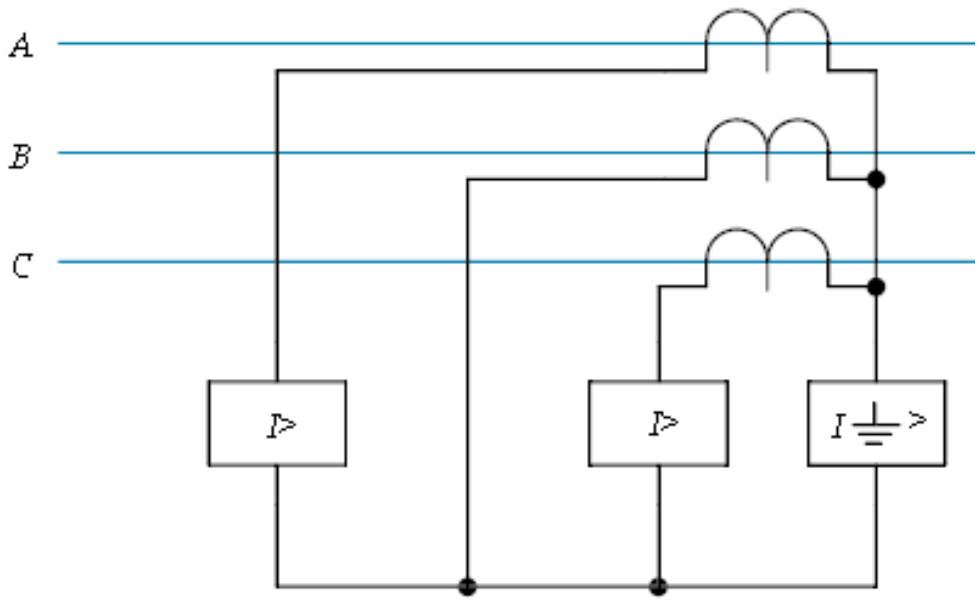
A
B
C
I>
I>
I ⏚ >

Guidelines for Setting Pickup Current for Phase Fault Relays

- Pickup current should be above the maximum load current.
- Pickup current should be below minimum fault current.
- Pickup current should also be below the minimum fault current of the feeder that it has to back up.
- The back up relay also should provide time for primary relay to operate. This time interval is known as coordination time interval.